PROJECT NAME

RADIAN

aion
DIY GUITAR EFFECTS

BASED ON
Dallas Rangemaster

BUILD DIFFICULTY
Easy

EFFECT TYPE
Germanium treble booster

DOCUMENT VERSION
1.0.1 (2021-10-29)

PROJECT SUMMARY

A single-transistor germanium circuit designed to add treble and boost the signal into dark amplifiers to improve the amp's drive tone.

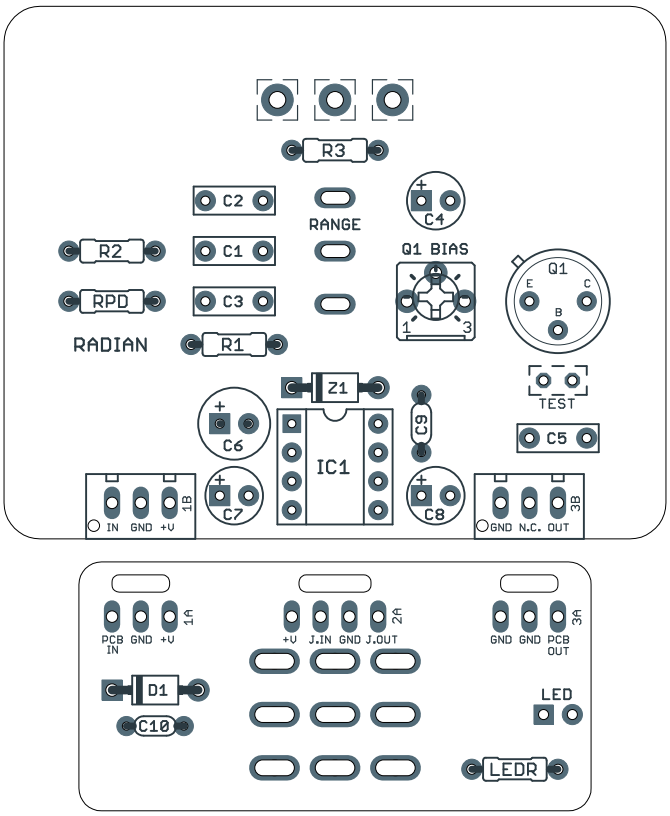

Actual size is 2.3" x 1.86" (main board) and 2.3" x 0.86" (bypass board).

TABLE OF CONTENTS

1 Project Overview
2 Introduction & Usage
3 Parts List
4 Build Notes
5 Schematic
6 Drill Template
7 Enclosure Layout
8 Wiring Diagram
9 Licensing
9 Document Revisions

INTRODUCTION

The Radian Treble Booster is an adaptation of the Rangemaster Treble Booster produced by Dallas Musical Ltd. of London beginning in 1965. (Dallas would later merge with Arbiter Electronics to form Dallas-Arbiter, best known for the Fuzz Face.)

The Rangemaster was originally designed to add treble content to somewhat dark British amplifiers such as the Vox AC30, but it took on a life of its own in the hands of Brian May, Tony Iommi, Rory Gallagher, and several other highly-regarded guitarists of that era.

The original Rangemaster was not actually a pedal, but rather an enclosure that was intended to sit on top of the amplifier. Bypass was done via a slide switch on the front of the unit, so it wasn't practical to turn it on and off while playing, and it was used as an always-on tone enhancer.

The Radian is a pedal conversion of the Rangemaster with one big enhancement: a voltage inverter has been added which allows it to be powered with a standard center-negative adapter while maintaining the positive-ground operation of the original. The PCB also includes a biasing trim pot so you can dial in a perfect bias without having to swap out resistors.

The other enhancement is a "Range" toggle switch that lets you choose between a treble boost, mid boost, or full-range boost. The treble-boost effect in this circuit is achieved by first cutting low frequencies, then boosting the whole signal so that the lows are restored to normal and the treble frequencies are emphasized. This toggle switch lowers the low-frequency cutoff point so that less of the signal is cut and more is boosted.

USAGE

The Radian has one control and one toggle:

- **Boost** controls the signal level of the effect. At higher levels, the transistor begins to saturate and clip the signal, so it doubles as a gain or drive control as well.
- **Range** is a toggle switch that lets you choose between treble (stock), mid or full-frequency boost. Treble is the center position of the toggle, mid is down, and full is up.

PARTS LIST

This parts list is also available in a spreadsheet format which can be imported directly into Mouser for easy parts ordering. Mouser doesn't carry all the parts—notably potentiometers—so the second tab lists all the non-Mouser parts as well as sources for each.

View parts list spreadsheet →

PART	VALUE	TYPE	NOTES
R1	470k	Metal film resistor, 1/4W	
R2	68k	Metal film resistor, 1/4W	
R3	1k	Metal film resistor, 1/4W	
RPD	1M	Metal film resistor, 1/4W	Input pulldown resistor.
LEDR	4k7	Metal film resistor, 1/4W	LED current-limiting resistor. Adjust value to change LED brightness.
C1	4n7	Film capacitor, 7.2 x 2.5mm	
C2	6n8	Film capacitor, 7.2 x 2.5mm	Sets the frequency of the Range switch. See build notes.
C3	22n	Film capacitor, 7.2 x 2.5mm	Sets the frequency of the Range switch. See build notes.
C4	47uF	Electrolytic capacitor, 5mm	
C5	10n	Film capacitor, 7.2 x 2.5mm	
C6	100uF	Electrolytic capacitor, 6.3mm	
C7	10uF	Electrolytic capacitor, 5mm	
C8	47uF	Electrolytic capacitor, 5mm	
C9	100n	MLCC capacitor, X7R	
C10	100n	MLCC capacitor, X7R	
Z1	1N4742A	Zener diode, 12V, DO-41	
D1	1N5817	Schottky diode, DO-41	
Q1	Germanium	Germanium transistor, PNP	Recommended to buy a selected Rangemaster transistor. See build notes.
Q1-S	TO-5 socket	Transistor socket, TO-5	
IC1	TC1044SCPA	Voltage inverter, DIP8	
IC1-S	DIP-8 socket	IC socket, DIP-8	
BIAS	5k trimmer	Trimmer, 10%, 1/4"	
BOOST	10kA	16mm right-angle PCB mount pot	
RANGE	SPDT cntr off	Toggle switch, SPDT on-off-on	
LED	5mm	LED, 5mm, red diffused	
IN	1/4" stereo	1/4" phone jack, closed frame	Switchcraft 112BX or equivalent.
OUT	1/4" mono	1/4" phone jack, closed frame	Switchcraft 111X or equivalent.
DC	2.1mm	DC jack, 2.1mm panel mount	Mouser 163-4302-E or equivalent.
BATT	Battery snap	9V battery snap	Optional. Use the soft plastic type—the hard-shell type will not fit.
FSW	3PDT	Stomp switch, 3PDT	
ENC	125B	Enclosure, die-cast aluminum	Can also use a Hammond 1590N1.

BUILD NOTES

Transistor

For this circuit, as with other vintage fuzzes, it's not so much the part number of the germanium transistor as it is the properties—specifically, gain (hFE) and leakage.

The Rangemaster is not picky about the transistor that is used, but you can save some trouble by just buying a Rangemaster transistor from Small Bear Electronics or somewhere else. However, if you don't have access to pre-matched transistors or you just want to sort your own, here's what to look for.

Characteristics

For the Rangemaster, you're looking for a PNP germanium transistor that meets the following characteristics:

- **Gain (hFE):** 65 to 100
- **Leakage:** Less than 300µA (no minimum)

This is just a general guideline. There are some transistors that meet these characteristics that won't sound right, and others that are outside this nominal range that will work just fine.

Biasing

The Radian is set up to allow for easy biasing of the transistor using a trimmer without having to swap out resistors.

As a starting point, turn the bias trimmer to the halfway position. Then, with a multimeter, touch the black and red leads to the two pads marked "TEST".

Adjust the trimmer until the multimeter reads **-7V** (either positive or negative depending on which lead is touching which pad) and then play through it and see how you like it.

The target collector voltage is between -6.8V and -7.1V for a replica of the vintage unit, but you can get a lot more gain out of it if you choose. Let your ear be the final judge.

Note that if you can't get it to bias correctly, you may need to reduce R2 to 47k. This is dependent on the leakage property of the transistor.

Range switch

The input capacitor is responsible for setting the bass cutoff (treble emphasis) of the circuit. The stock value is 4n7, which is "treble" mode. The values of C2 and C3 set the bass cutoff for midrange and full-range mode respectively.

The values provided for C2 and C3 have been selected by ear based on testing, but as with everything, it was done with a limited set of guitars and amplifiers and the two additional modes may not be perfect for everyone. If you find that either of the mid or full-range positions need to be adjusted, you can change the value of C2 and C3. Decreasing the value will lower the bass in that mode, while raising the value will increase the bass. Be aware that this method of adding or removing bass is highly interactive with what comes before it in the chain, so the effect may be drastic or it may not.

SCHEMATIC

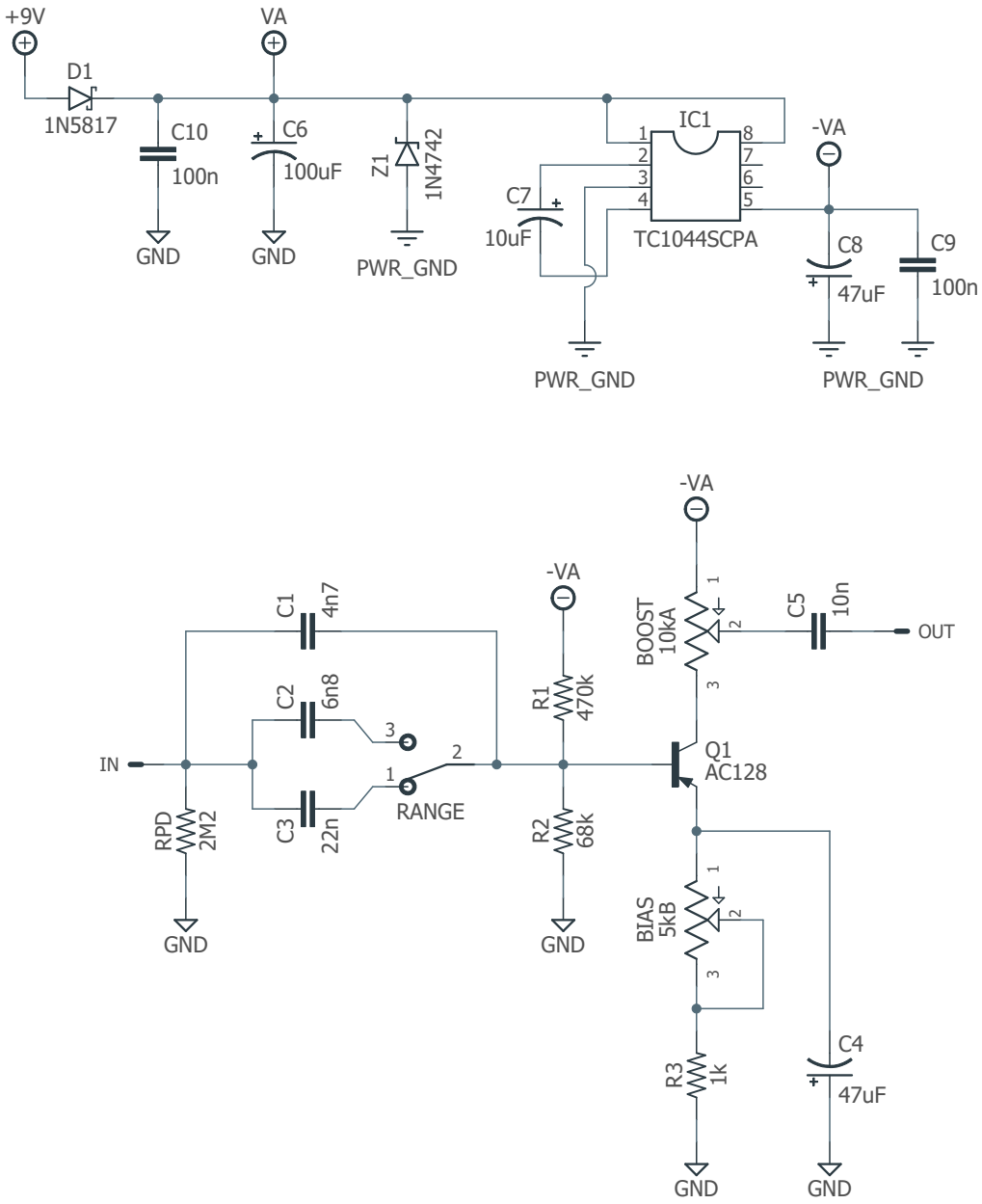
+9V
VA
D1
1N5817
C10
100n
GND
C6
100uF
GND
Z1
1N4742
PWR_GND
C7
10uF
IC1
TC1044SCPA
-VA
C8
47uF
C9
100n
PWR_GND
PWR_GND
-VA
C1
4n7
-VA
BOOST
10kA
C5
10n
OUT
C2
6n8
R1
470k
IN
3
2
1
RANGE
Q1
AC128
RPD
2M2
C3
22n
R2
68k
GND
GND
BIAS
5kB
R3
1k
C4
47uF
GND
GND

DRILL TEMPLATE

Cut out this drill template, fold the edges and tape it to the enclosure. Before drilling, it's recommended to first use a center punch for each of the holes to help guide the drill bit.

Ensure that this template is printed at 100% or "Actual Size". You can double-check this by measuring the scale on the printed page.

Top jack layout assumes the use of closed-frame jacks like the Switchcraft 111X.

LED hole drill size assumes the use of a 5mm LED bezel, available from several parts suppliers. Adjust size accordingly if using something different, such as a 3mm bezel, a plastic bezel, or just a plain LED.

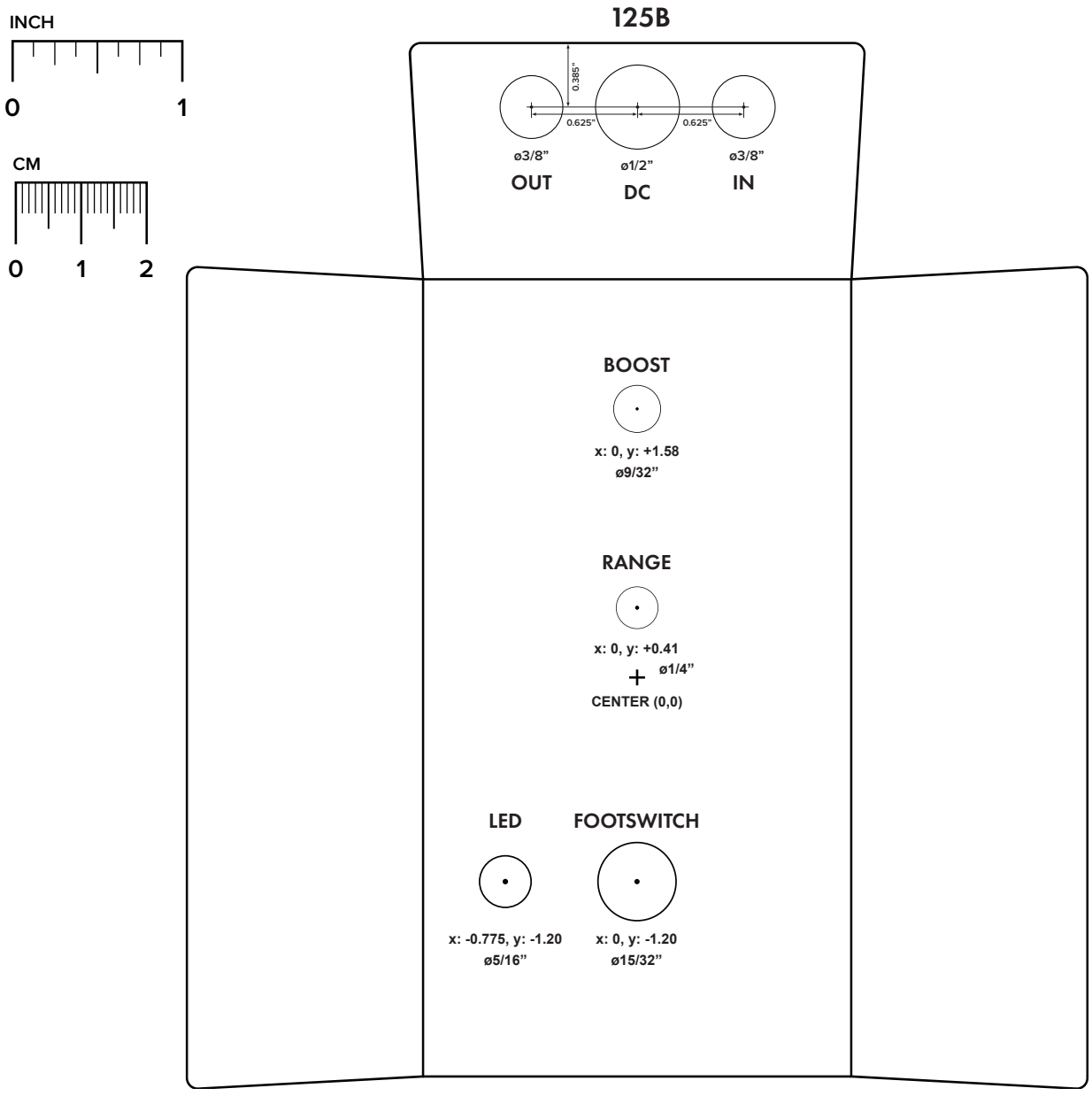

ENCLOSURE LAYOUT

Enclosure is shown without jacks. See next page for jack layout and wiring.

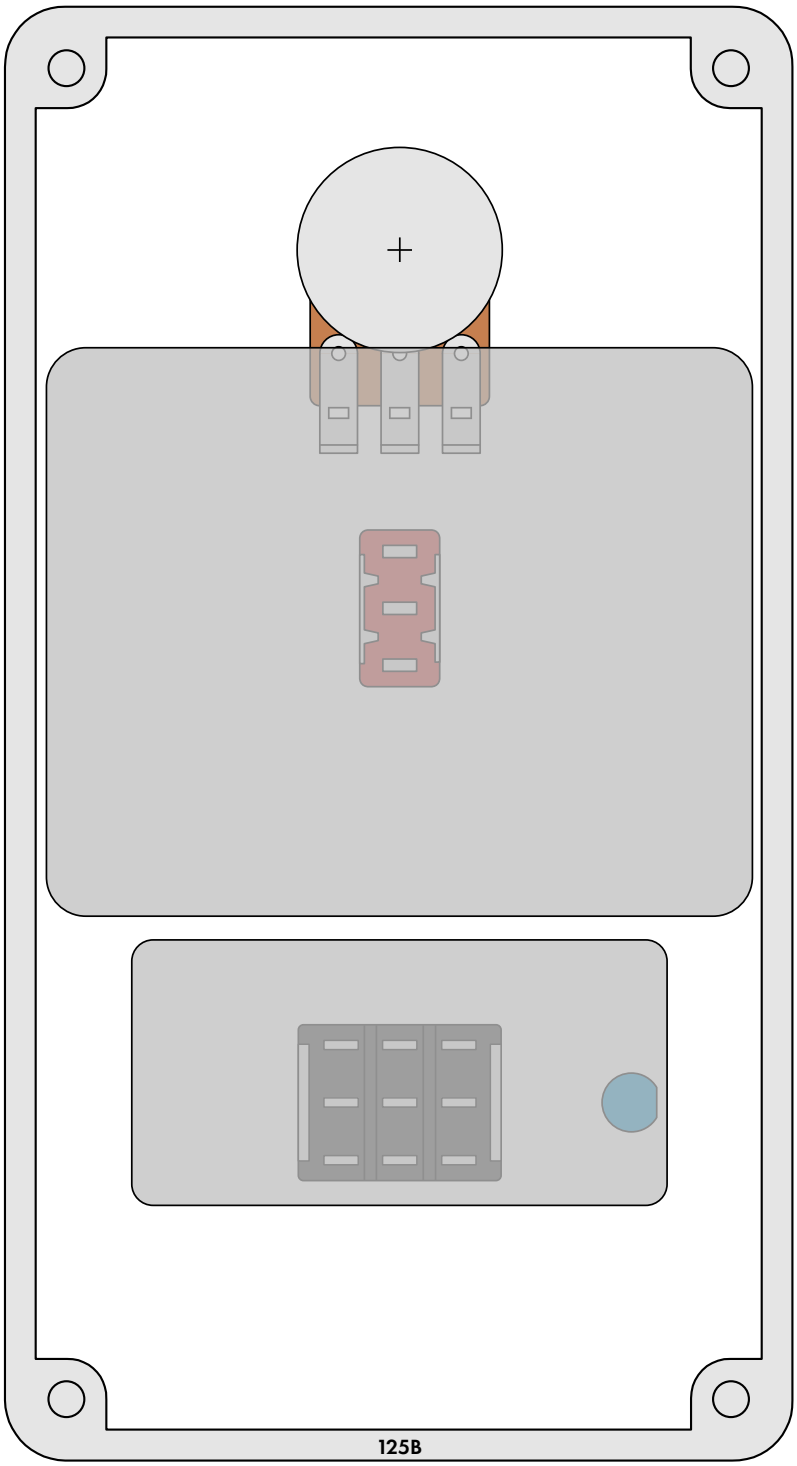

WIRING DIAGRAM

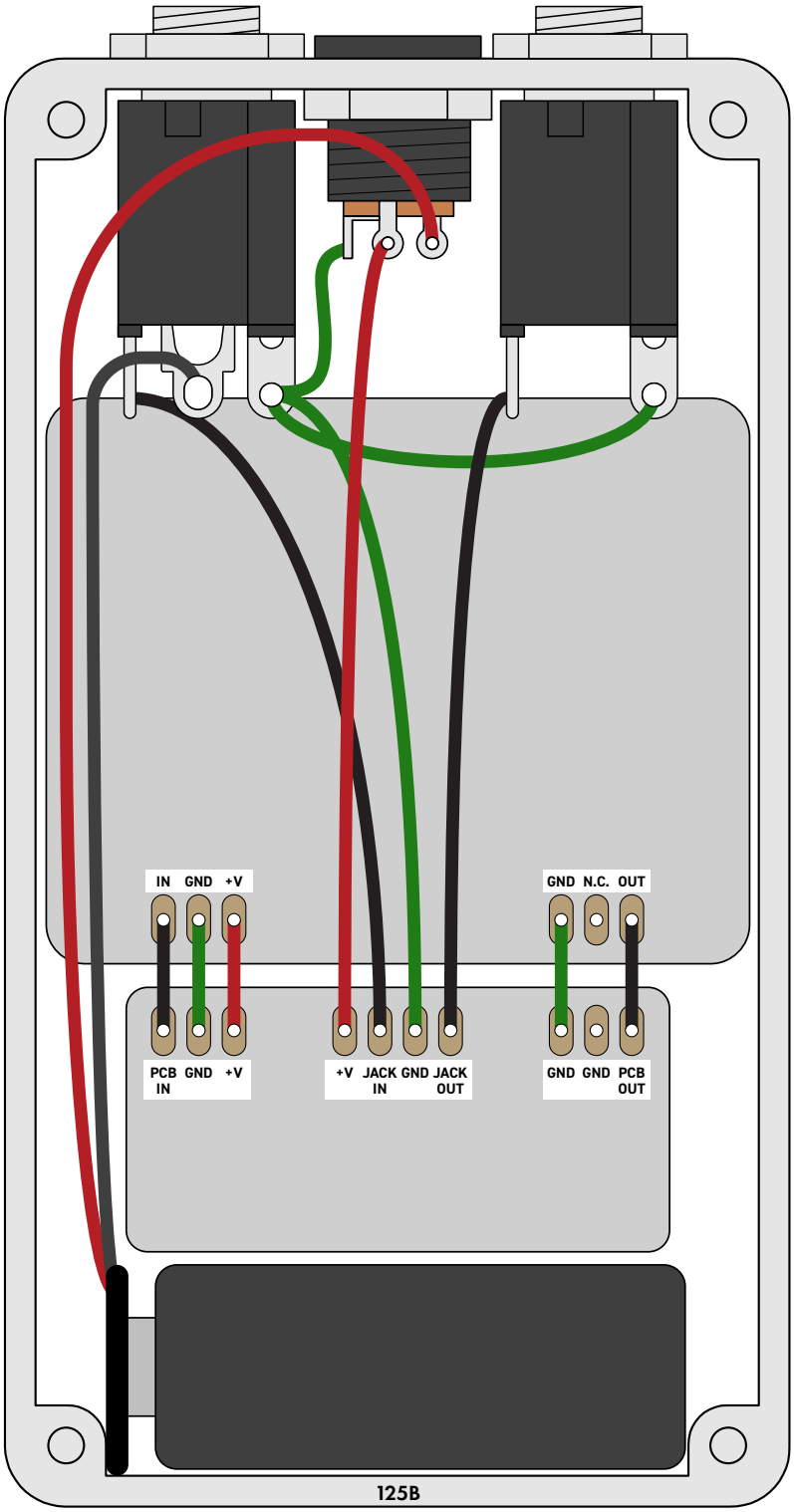

Shown with optional 9V battery. If battery is omitted, both jacks can be mono rather than one being stereo. Leave the far-right lug of the DC jack unconnected.

LICENSE & USAGE

No direct support is offered for these projects beyond the provided documentation. It's assumed that you have at least some experience building pedals before starting one of these. Replacements and refunds cannotbe offered unless it can be shown that the circuit or documentation are in error.

All of these circuits have been tested in good faith in their base configurations. However, not all the modifications or variations have necessarily been tested. These are offered only as suggestions based on the experience and opinions of others.

Projects may be used for commercial endeavors in any quantity unless specifically noted. No attribution is necessary, though a link back is always greatly appreciated. The only usage restrictions are that **(1) you cannot resell the PCB as part of a kit without prior arrangement**, and **(2) you cannot "goop" the circuit, scratch off the screenprint, or otherwise obfuscate the circuit to disguise its source**. (In other words: you don't have to go out of your way to advertise the fact that you use these PCBs, but please don't go out of your way to hide it. The guitar effects industry needs more transparency, not less!)

DOCUMENT REVISIONS

1.0.1 (2021-10-29)
Changed recommended capacitors for the Range switch (C2 and C3). Stock Rangemaster mode is unaffected.

1.0.0 (2020-07-03)
Initial release.